N7TN801LEV134

NB7/500 7,5 400/50 CE 1" AIRUM

Fecha validez 03/03/2022

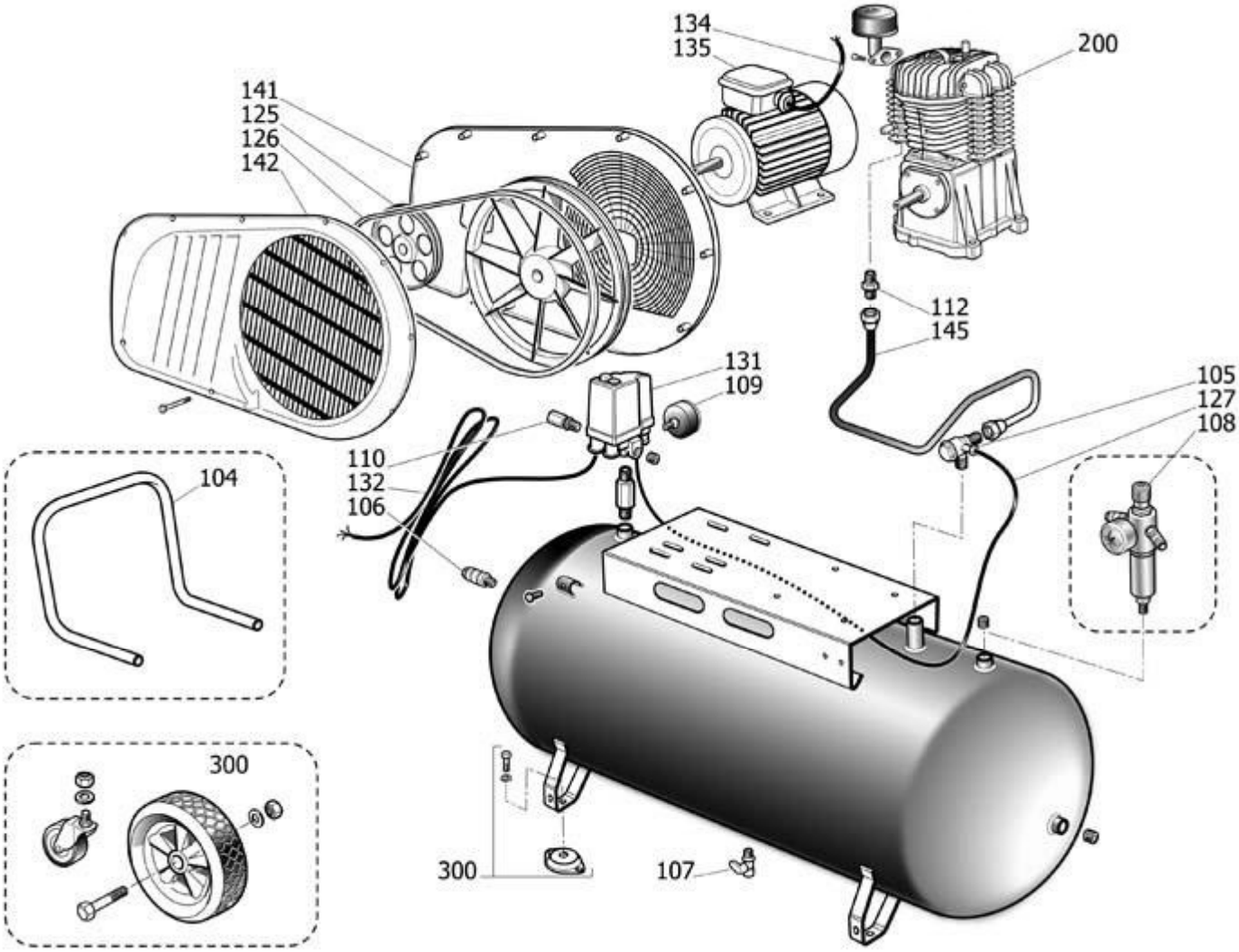

N7TN801LEV134

NB7/500 7,5 400/50 CE 1" AIRUM

Pos	Component		MU	Multiplier
105	4101335	VALVULA DE AJUSTE	PZ	1,0
106	9047089	GRIFO DE LINEA	PZ	1,0
107	9047079	GRIFO DESCARGA CONDENSACION	PZ	1,0
109	9052805	MANOMETRO	PZ	1,0
110	9049304	VALVULA DE SEGURIDAD	PZ	1,0
112	9053008	NIPLE	PZ	1,0
125	9076910	POLEA	PZ	1,0
126	9075882	CORREA POLY V	PZ	1,0
127	9270019	TUBO RILSAN 4X6 PTFE NEUTRO	MT	1,5
131	9063228	PRESOSTATO COMPLETO	PZ	1,0
132	9065411	CABLE DE ALIMENTACION	PZ	1,0
134	9065413	JUNTA TAPA	PZ	1,0
135	848S00A	MOTOR	PZ	1,0
141	833260E	ENCANALADOR	PZ	1,0
142	833250E	PROTECCION PARA CORREA	PZ	1,0
145	9043522	TUBO IMPULSION	PZ	1,0
200	N70001C	GRUPO CABEZAL	PZ	1,0
300	9420592	KIT RUEDAS/PIES	PZ	1,0
4039	9053913	RIDUZ.1"M 1/2"F OT.NICHEL.CEOK	PZ	1,0

PUMP NB7 C/VOL.

GRUPO CABEZAL

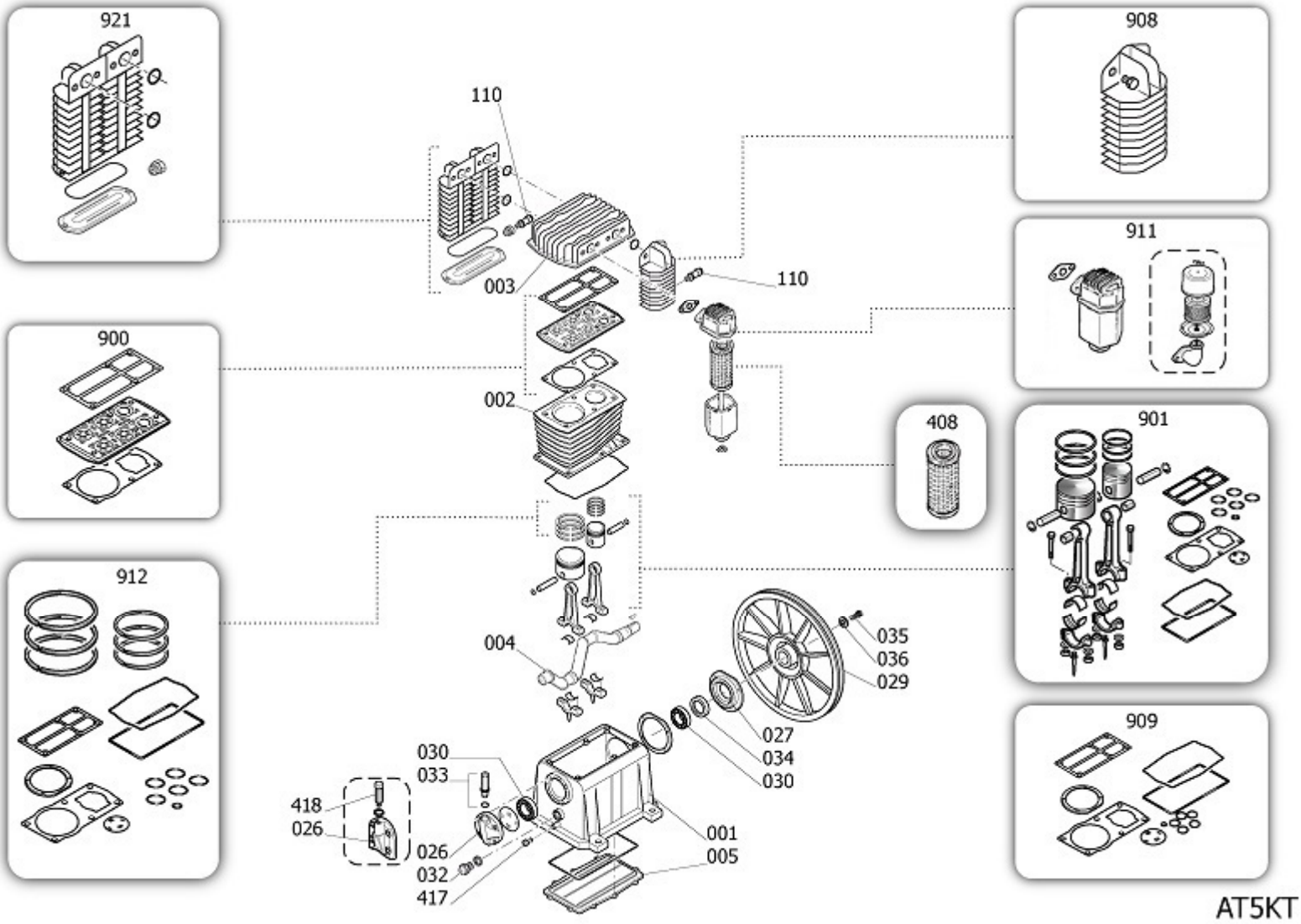

PUMP NB7 C/VOL.

GRUPO CABEZAL

Pos	Component		MU	Multiplier
1	#113153301	CARTER	PZ	1,0
2	BR30000SGL	CILINDRO	PZ	1,0
3	#113178002	CABEZAL	PZ	1,0
4	#113178006	ARBOL	PZ	1,0
5	#113153007	TAPA CARTER	PZ	1,0
26	BZ61690	TAPA DELANTERA	PZ	1,0
27	#113141007	SOPORTE TRASERO CARCASA	PZ	1,0
29	#113178007	VOLANTE	PZ	1,0
30	$30300030	RODAMIENTO 6205 K8-K28	PZ	1,0
30	$30302140	RODAMIENTO 6206 C3	PZ	1,0
32	#012031000	INDICADOR ACEITE	PZ	1,0
34	#010008000	JUNTA	PZ	1,0
35	#114001043	TORNILLO VOLANTE	PZ	5,0
36	4105234	ARANDELA VOLANTE	PZ	1,0
110	#047086000	VALVULA DE SEGURIDAD	PZ	1,0
110	9049184	VALVULA DE SEGURIDAD	PZ	1,0
408	9434N04	MPK ELEM.FILTR.ROT K17-K100	PZ	1,0
417	$36531140	TAPON ACEITE	PZ	1,0
418	$12505950	KIT TAPPO SFIATO	PZ	1,0
900	9434A27	MPK PIASTRA VALVOLE BK119 NW	PZ	1,0
901	9434B30	MPK PISTONE-BIELLA BK119 NW	PZ	1,0
908	9434E04	MPK COLLETTORE BK113-114-119	PZ	1,0
909	9434F27	MPK GUARNIZIONI BK119 NW	PZ	1,0
911	9420936	KIT FILTRO AIRE	PZ	1,0
912	9434C28	MPK SEGMENTI BK119 NW	PZ	1,0
921	9434D00	MPK COLL.INTERMEDIO BK113-119	PZ	1,0